Immediately join the Shimge Family by scanning:
https:www.shimgepump.com/

SHIMGE PUMP INDUSTRY GROUP CO.,LTD.

Add: Dayangcheng Industrial Zone, Daxi Town, Wenling City, Zhejiang Province, China
Tel: +86-576-86339960
Fax: +86-576-86337079
Email: admin@shimge.com

Version No .202003

SHIMGE®
for better life

YS Series Stainless Steel Single Stage Centrifugal Pump

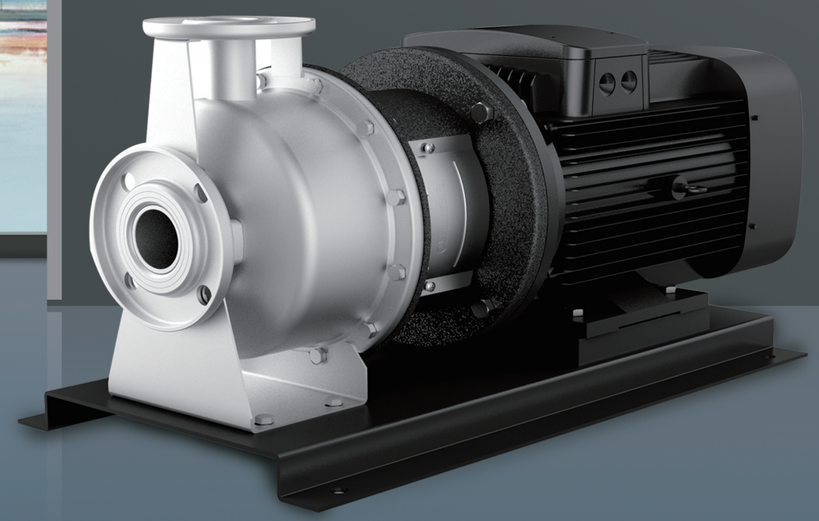

DIRECTORY

01P
- Product Overview
- Model Description

02P
- Operating Conditions
- Structural Features

03P
- Applications
- Spectrum Diagram

05P
- Electric Motor

07P
- Product Structure
- Installation Conditions

12P
- Technical Data

Product Overview

Made by adopting such advanced technologies as stamping, bulging and welding of stainlesssteel plates, YS stainless steel horizontal single stage centrifugal pump is a new generation of domestically initiative centrifugal pump, which can replace traditional IS pumps and general corrosion-resistance pumps. It has such features as good-looking appearance, lightweight structure, high efficiency and energy saving, robustness, resistance to light corrosion, and low noise.

Model Description

YS 65 - 50 - 200 / 11.0

- 11.0 — Motor power (kW)
- 200 — Nominal diameter of impeller (mm)
- 50 — Diameter of outlet (mm)
- 65 — Diameter of inlet (mm)
- YS — Stainless steel horizontal single stage centrifugal pump

Operating Conditions

The use of YS pump is restricted by the following conditions:

1. Clean, thin, and non-flammable & non-explosive liquid that does not contain solid particles and fibers;
2. Liquid at the temperature between −20° C and +100° C;
3. Maximum ambient temperature: +40° C;
4. Maximum altitude: 1000m;
5. Maximum pressure of the system: 10bar.

Structural Features

Motor

High efficiency and energy saving
Angular contact bearing is adopted at the drive end, so that the motor operates more safely with lower noise.

Pump body

Stainless steel stamping and welding
Good discharge capacity
Reliable hydraulic self-balancing

Pump cover

Professional style design
Heightened design, equipped with protective cover
Surface electrophoresis treatment
Good ventilation and heat dissipation

Pump shaft

Sleeve coupling type
100,000 times of reliability testing
Stainless steel material
Dynamic balancing

Motor

High efficiency and energy saving
Angular contact bearing is adopted at the drive end, so that the motor operates more safely with lower noise.

The international popular modular design is adopted to reduce the unnecessary parts and components, guarantee the universality of parts, and facilitate purchasing, manufacturing and maintenance.

Applications

YS stainless steel horizontal single stage centrifugal pump is a multi-functional product with a wide range of applications, which can convey various media including water or industrial liquids, applicable to different ranges of temperature, flow and pressure. Its typical applications mainly include the following:

- Water supply: Filtering, transmission, sectionalized water supply, and manifold pressurization;
- Industrial pressurization: Process water system and cleaning system;
- Industrial liquid conveying: Boiler water supply, condensing system, cooling and air conditioning system, machine matching, and weak acid and alkali conveying;
- Water treatment: Distillation system or separator, and swimming pool, etc.;
- Farm irrigation, and medicine and health, etc.

Spectrum Diagram

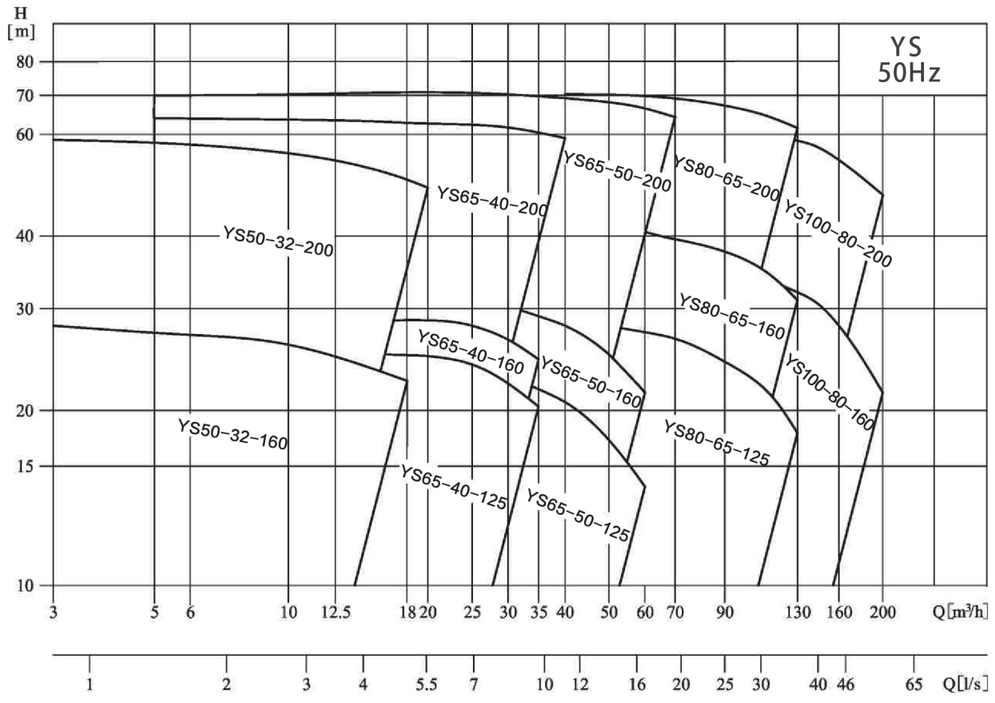

No.	Model	Flow rate	Lift	Rotating speed	Standard motor voltage [V]	
		(m³/h)	(m)	(r/min)	1×220V P₂[kW]	3×380V P₂[kW]
1	YS50-32-160/1.5	12.5	20	2900	/	1.5
2	YS50-32-160/2.2	12.5	25		/	2.2
3	YS50-32-200/3	12.5	32		/	3
4	YS50-32-200/4	12.5	42		/	4
5	YS50-32-200/5.5	12.5	54		/	5.5
6	YS65-40-125/1.5	25	13		/	2.2
7	YS65-40-125/2.2	25	18		/	1.5
8	YS65-40-125/3	25	24		/	3
9	YS65-40-160/4	20	28		/	4
10	YS65-40-200/5.5	25	36		/	5.5
11	YS65-40-200/7.5	25	46		/	7.5
12	YS65-40-200/11	25	62	2950	/	11
13	YS65-50-125/3	50	13	2900	/	3
14	YS65-50-125/4	50	18		/	4
15	YS65-50-160/5.5	50	25		/	5.5
16	YS65-50-200/7.5	50	32		/	7.5
17	YS65-50-200/9.2	50	40		/	9.2
18	YS65-50-200/11	50	48	2950	/	11
19	YS65-50-200/15	50	58		/	15
20	YS65-50-200/18.5	50	68		/	18.5
21	YS80-65-125/5.5	100	13	2900	/	5.5
22	YS80-65-125/7.5	100	18		/	7.5
23	YS80-65-125/11	100	23		/	11
24	YS80-65-160/11	100	27	2950	/	11
25	YS80-65-160/15	100	36		/	15
26	YS80-65-200/18.5	100	45		/	18.5
27	YS80-65-200/22	100	53		/	22
28	YS80-65-200/30	100	66		/	30
29	YS100-80-160/11	160	15		/	11
30	YS100-80-160/15	160	22		/	15
31	YS100-80-160/18.5	160	28		/	18.5
32	YS100-80-200/22	160	33		/	22
33	YS100-80-200/30	160	45		/	30
34	YS100-80-200/37	160	54		/	37

Motor

■ **Structure:** All-series totally enclosed air-cooled three-phase asynchronous standard motor, in which single-phase motor is optional for the power range of 1.1kW ~ 2.2kW.

■ **Motor protection:** Single-phase motor is equipped with the built-in thermal protector, and three-phase motor shall be connected to the motor starter according to local regulations.

■ **Ambient temperature:** ≤40° C; in an environment above thistemperature, or when the motor is installed at an altitude above 1000m, due to the lower air density, the cooling effect of motor weakens, the loss of windings and iron core increases, and the operating efficiency reduces, resulting in the drop in the output power (P2) of motor; in this case, a motor with higher output power must be selected, as shown in Figure 1.

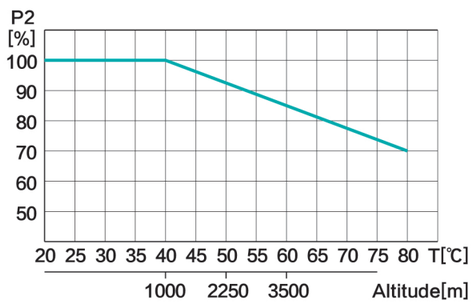

■ Figure 1 Relationship between motor output power (P2) and ambient temperature

Parameters of Standard High Efficiency (IE2) Three-phase Motor

Rated power (kW)	Rated current(A) 380(V)	415(V)	Rated speed (r/min)	Power factor (cosφ)	Efficiency (%)	Connection method	Standard motor voltage [V]
1.1	2.53	2.32	2860	0.83	79.6	Y	6204ZZ
1.5	3.34	3.06	2890	0.84	81.3	Y	front6305ZZ,rear6205ZZ
2.2	4.73	4.33	2890	0.85	83.2	Y	front6305ZZ,rear6205ZZ
3	6.19	5.67	2880	0.87	84.6	Y	front6306ZZ,rear6206ZZ
4	8.05	7.37	2910	0.88	85.8	△	front6306ZZ,rear6206ZZ
5.5	10.9	10.0	2905	0.88	87.0	△	6308ZZ
7.5	14.5	13.3	2915	0.89	88.1	△	6308ZZ
11	21.0	19.2	2935	0.89	89.4	△	6308ZZ
15	28.4	26.0	2935	0.89	90.3	△	6308ZZ
18.5	34.7	31.8	2935	0.89	90.9	△	front7309B,rear6309ZZ
22	41.1	37.7	2950	0.89	91.3	△	front7309B,rear6309ZZ
30	55.7	51.0	2960	0.89	92.0	△	front7309B,rear6309ZZ
5.5	11.6	10.6	1455	0.82	87.7	△	front7311B,rear6311ZZ
7.5	15.5	14.2	1455	0.83	88.7	△	6308ZZ
11	22.4	20.5	1465	0.83	89.8	△	front7309B,rear6309ZZ
15	29.9	27.4	1465	0.84	90.6	△	front7309B,rear6309ZZ
18.5	36.3	33.2	1470	0.85	91.2	△	front7311B,rear6311ZZ
22	42.9	39.3	1470	0.85	91.6	△	front7311B,rear6311ZZ
30	58.1	53.2	1475	0.85	92.3	△	front7312B,rear6312ZZ
37	70.5	64.6	1480	0.86	92.7	△	front7313B,rear6313ZZ
30	58.1	53.2	1475	0.85	92.3	△	front7312B,rear6312ZZ
37	70.5	64.6	1480	0.86	92.7	△	front7313B,rear6313ZZ
45	85.4	78.2	1480	0.86	93.1	△	front7313B,rear6313ZZ
55	104	95	1480	0.86	93.5	△	front7314B,rear6314ZZ
75	139	128	1485	0.87	94.0	△	front7317B,rear6317ZZ
90	165	151	1485	0.88	94.2	△	front7317B,rear6317ZZ
110	199	182	1485	0.89	94.5	△	front7319B,rear6319ZZ
132	238	218	1485	0.89	94.7	△	front7319B,rear6319ZZ

Parameters of Premium Efficiency (IE3) Three-phase Motor

Rated power (kW)	Rated current(A) 380(V)	415(V)	Rated speed (r/min)	Power factor (cosφ)	Efficiency (%)	Connection method	Standard motor voltage [V]
1.1	2.4	2.2	2880	0.83	82.7	Y	6204ZZ
1.5	3.2	3.0	2895	0.84	84.2	Y	front6305ZZ,rear6205ZZ
2.2	4.6	4.2	2895	0.85	85.9	Y	front6305ZZ,rear6205ZZ
3	6.0	5.5	2895	0.87	87.1	Y	front6306ZZ,rear6206ZZ
4	7.8	7.2	2905	0.88	88.1	△	front6306ZZ,rear6206ZZ
5.5	10.6	9.8	2930	0.88	89.2	△	6308ZZ
7.5	14.4	13.2	2930	0.88	90.1	△	6308ZZ
11	20.6	18.9	2945	0.89	91.2	△	front7309B,rear6309ZZ
15	27.9	25.5	2945	0.89	91.9	△	front7309B,rear6309ZZ
18.5	34.2	31.3	2940	0.89	92.4	△	front7319B,rear6309ZZ
22	40.5	37.1	2955	0.89	92.7	△	front7311B,rear6311ZZ
30	54.9	50.3	2960	0.89	93.3	△	front7312B,rear6312ZZ
5.5	11.2	10.3	1440	0.83	89.6	△	6308ZZ
7.5	15.0	13.7	1460	0.84	90.4	△	6308ZZ
11	21.5	19.7	1465	0.85	91.4	△	front7309B,rear6309ZZ
15	28.8	26.4	1465	0.86	92.1	△	front7309B,rear6309ZZ
18.5	35.3	32.3	1470	0.86	92.6	△	front7311B,rear6311ZZ
22	41.8	38.3	1470	0.86	93.0	△	front7311B,rear6311ZZ
30	56.6	51.9	1475	0.86	93.6	△	front7312B,rear6312ZZ
37	69.6	63.7	1485	0.86	93.9	△	front7313B,rear6313ZZ
45	84.4	77.3	1485	0.86	94.2	△	front7313B,rear6313ZZ
55	102.7	94.1	1485	0.86	94.6	△	front7314B,rear6314ZZ
75	136.3	124.8	1486	0.88	95.0	△	front7317B,rear6317ZZ
90	163.2	149.5	1486	0.88	95.2	△	front7317B,rear6317ZZ
110	196.8	180.2	1488	0.89	95.4	△	front7319B,rear6319ZZ
132	235.7	215.8	1488	0.89	95.6	△	front7319B,rear6319ZZ

The product has two structures: integral structure for 1.5kW~4kW, and separated structure for 5.5kW and above; the separated structure is mainly composed of the five core components: pump body, impeller, pump cover, pump shaft, and motor, the motor is separable from the pump, the pump part is designed as the top pull-out structure, and all models are equipped with the standard motor and mechanical seal. The pump body is equivalent to a section of pipeline, and during the maintenance of pumps, the pump body can be sealed with the blank flange so as not to affect the normal operation of the system. The impeller is of an enclosed structure, and adopts the design of the twisted blade, which better ensures high hydraulic efficiency. The pump cover has the dual function of supporting the motor and sealing the pump body, and the seal between it and the pump body adopts the static seal "O-ring". The dimensions of inlet & outlet flanges of the pump meet the stipulations of such standards as GB/T 17241.6, ISO 7005-2 and DIN 2501

■ Sectional views of the product

■ Separated structure

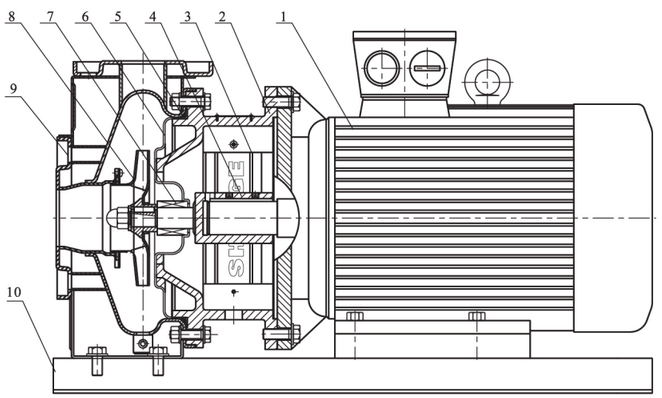

No.	Part name	Material
1	Motor	/
2	Pump cover	Cast iron HT200
3	Protective plate	Stainless steel 0Cr18Ni9
4	Pump shaft	Stainless steel 2Cr13/0Cr18Ni9
5	Rubber part	Buna-N rubber NBR
6	Baffle	Stainless steel 0Cr18Ni9
7	Mechanical seal	Graphite/Silicon carbide
8	Impeller	Stainless steel 0Cr18Ni9
9	Pump body	Stainless steel 0Cr18Ni9
10	Base	Steel Q235

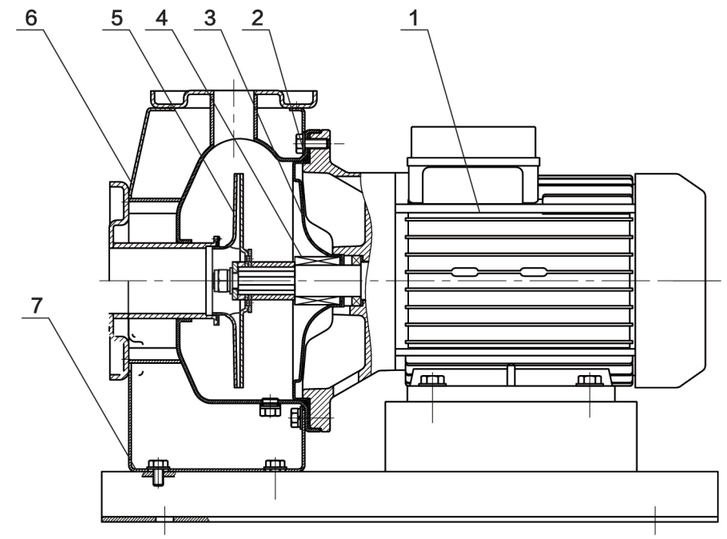

■ Integral structure

No.	Part name	Material
1	Motor	/
2	Rubber part	Buna-N rubber NBR
3	Baffle	Stainless steel 0Cr18Ni9
4	Mechanical seal	Stainless steel 0Cr18Ni9
5	Impeller	Stainless steel 0Cr18Ni9
6	Pump body	Steel Q235
7	Base	Graphite/silicon carbide

Installation Conditions

YS stainless steel horizontal single stage centrifugal pump adopts direct pump-shaft coupling, and it is composed of the pump, pump shaft and standard motor:

1. The pump shall be installed at a ventilated and anti-icing place;
2. The pump shall be so properly installed as to ensure that it is not affected by the tension of the system pipeline in use;
3. If the pump is installed outdoors, an appropriate outer cover must be provided to prevent water from entering or condensing in electrical components;
4. In order to facilitate inspection and maintenance, enough space must be left around the unit;
5. The electrical wiring device shall ensure that the pump is not damaged by phase loss, instable voltage, electrical leakage and overload;
6. The pump shall be horizontally mounted on the base, the horizontal direction is the inlet of pump, and the vertical direction is the outlet of pump.

■ Calculation of minimum inlet pressure

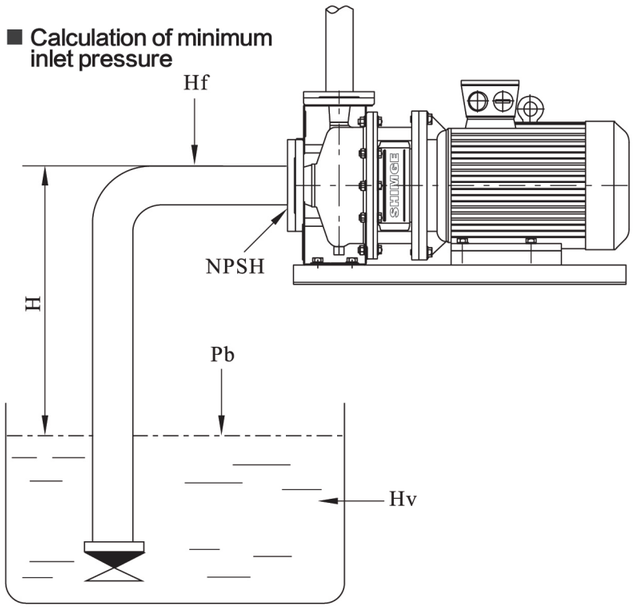

Inlet pressure: In order to ensure that the water pump is in the best operating state, and control the noise at the minimum level, the inlet pressure must be correctly calculated and set. If the pressure in the pump is lower than the vaporization pressure of the conveyed medium, cavitation will occur to the water pump, and in order to ensure a minimum pressure at the inlet of pump, the maximum suction height (m) can be calculated by the following formula:

$$H = P_b \times 10.2 - NPSH - H_f - H_v - H_s$$

P_b: Atmospheric pressure, unit: ba;

NPSH: Net positive suction height, unit: m (The specific value can be read from the numerical value corresponding to the maximum flow point of pump operation on the NPSH curve in the performance curves of corresponding models);

H_f: The inlet line loss at the maximum flow of pump operation, unit: m;

H_v: Vaporization pressure of liquid, unit: m (See the figure right for specific value);

H_s: Safety margin, unit: m, usually it takes 0.5m.

When calculated by the formula above, if the "H" value is positive, it indicates that the pump can operate at this suction height.

If the "H" value is negative, the pump can operate normally when the minimum inlet pressure reaches the pressure head of "H" m.

Notes: Usually the calculation above is not necessary, but the calculation is required under the following circumstances:

1. The liquid temperature is high;
2. The inlet conditions are poor;
3. The inlet pipeline is long, or the pump needs to be installed and used for suction;
4. The system pressure is too low;
5. The flow velocity of liquid is too high, causing a larger line loss.

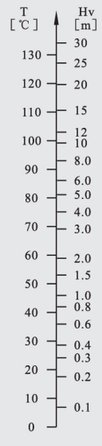

Examples of Performance Curves

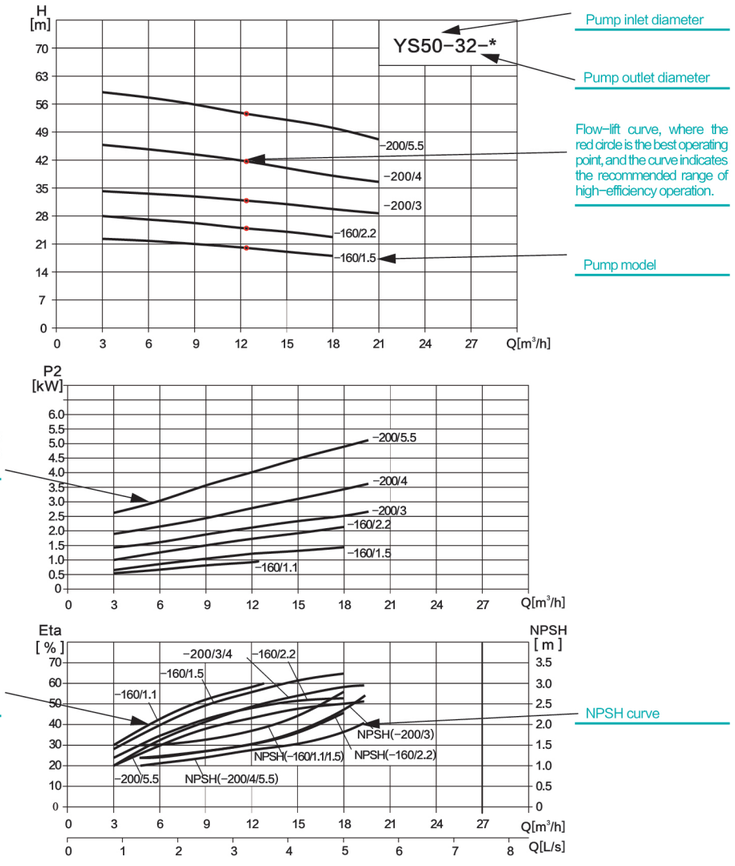

■ Applicable Principles of Performance Curves

1. The curve tolerance complies with ISO9906, Annex A;
2. The test medium is 20° C clean water that does not contain any solid impurity and air;
3. All curves are based on 3×380V electric motors with the rated speed of 2900rpm/1450rpm;
4. The curves are applicable to liquid with the kinematic viscosity Y=1mm/s (1cst);
5. In order prevent the danger of overheating, the pump shall be ensured to operate within the range of curves to avoid overload of motor.

YS50-32-*

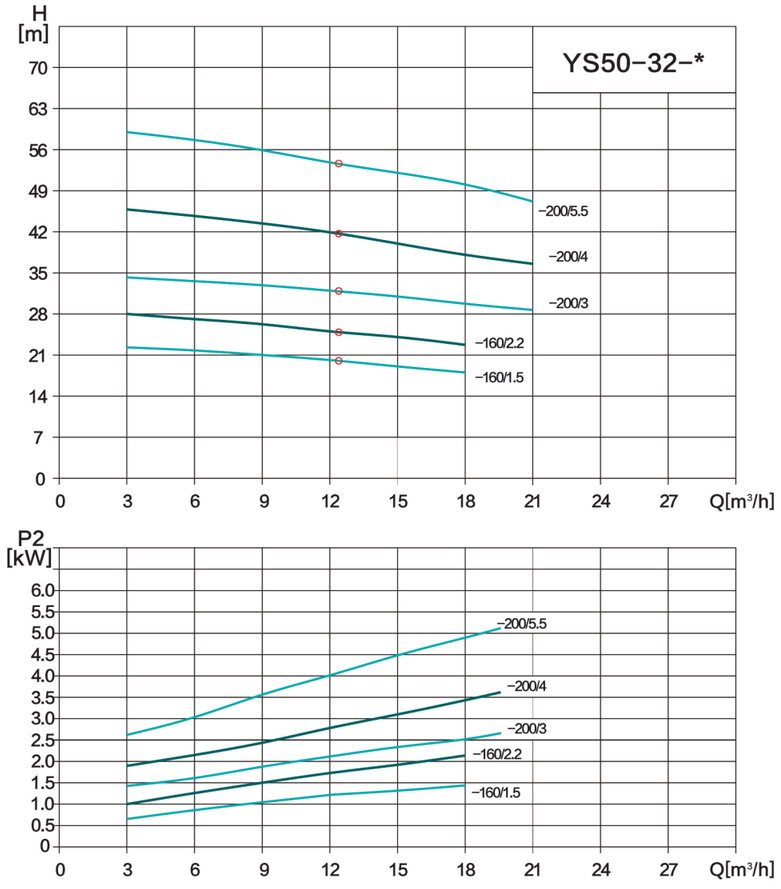

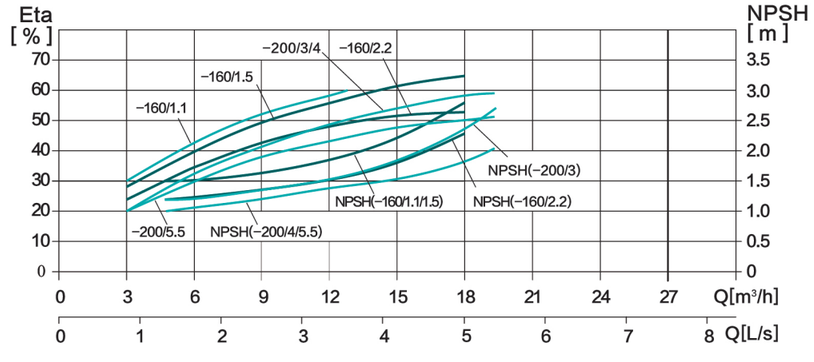

Performance Table

Pump model	Motor power(kW)	Q (m³/h)	3	6.3	9	15	18	20
YS50-32-160/1.5	1.5	H (m)	22.5	22	21	19	18	/
YS50-32-160/2.2	2.2		28	27	26.3	24	22.5	/
YS50-32-200/3	3		34.9	34.1	33.3	31	29.8	28.9
YS50-32-200/4	4		45.7	44.8	43.7	40.7	39	37.7
YS50-32-200/5.5	5.5		25.5	57.2	56	52.5	50	48.5

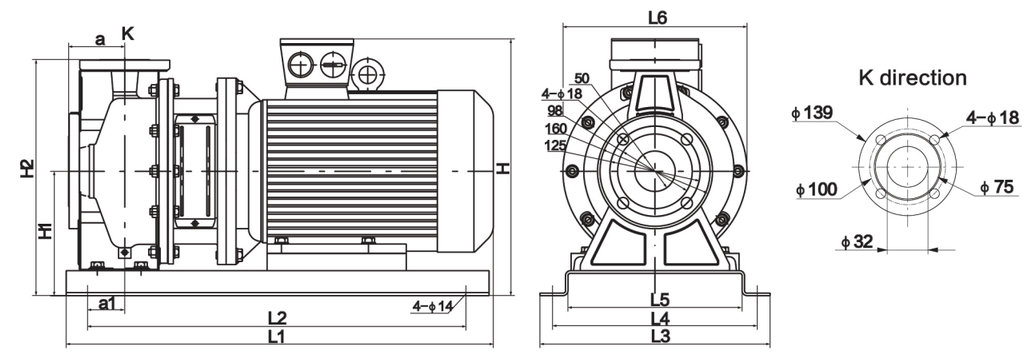

Dimensions and Weight

Pump model	Dimensions											Weight
	a	a1	H	H1	H2	L1	L2	L3	L4	L5	L6	(kg)
YS50-32-160/1.1	80	32	290	152	296	470	370	280	240	192	210	37
YS50-32-160/1.5	80	46	307	152	296	500	430	280	240	192	210	31
YS50-32-160/2.2	80	46	307	152	296	500	430	280	240	192	210	39
YS50-32-200/3	84	42	370	200	386	550	460	330	290	242	300	53
YS50-32-200/4	84	47	393	200	386	560	480	330	290	242	300	58
YS50-32-200/5.5	84	50	413	200	386	660	580	370	330	280	300	77

YS65-40-*

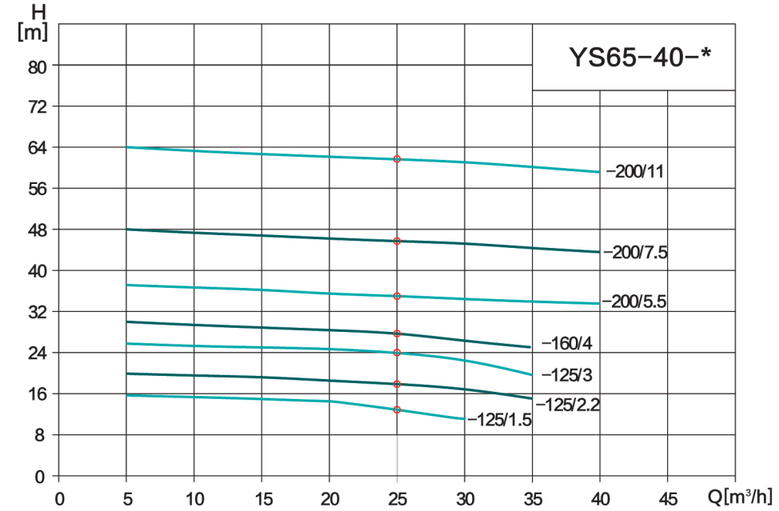

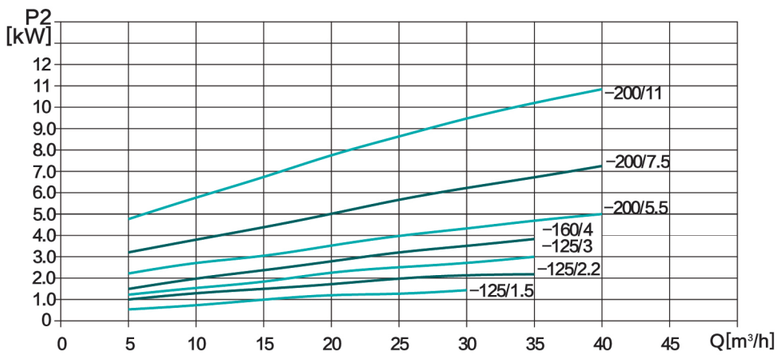

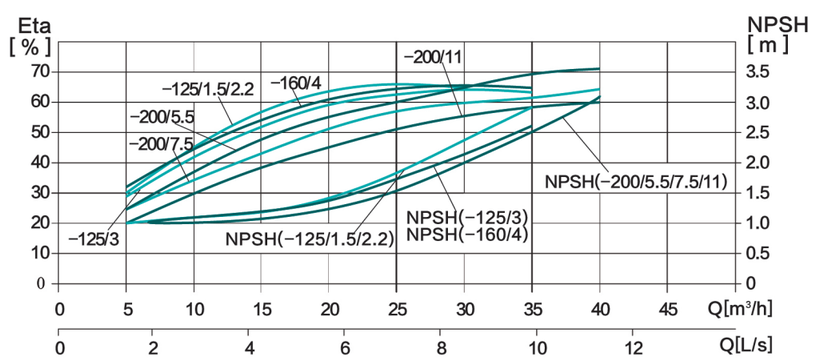

Performance Table

Pump model	Motor power(kW)	Q (m³/h)	5	10	15	20	25	30	35	40
YS65-40-125/1.5	1.5	H (m)	15.5	15.4	15	14.4	13	11.3	/	/
YS65-40-125/2.2	2.2		20	19.7	19.5	19	18	16.7	15.2	/
YS65-40-125/3	3		25.7	25.3	25.1	24.8	24	22.3	20.3	/
YS65-40-160/4	4		30	29.7	29.3	28.9	28	26.5	24.5	/
YS65-40-200/5.5	5.5		37.4	37.2	36.7	36.4	36	35.5	34.6	33.3
YS65-40-200/7.5	7.5		48	47.5	47	46.6	46	45.2	44.5	43.3
YS65-40-200/11	11		64	63.5	63	62.5	62	61.5	60.5	59

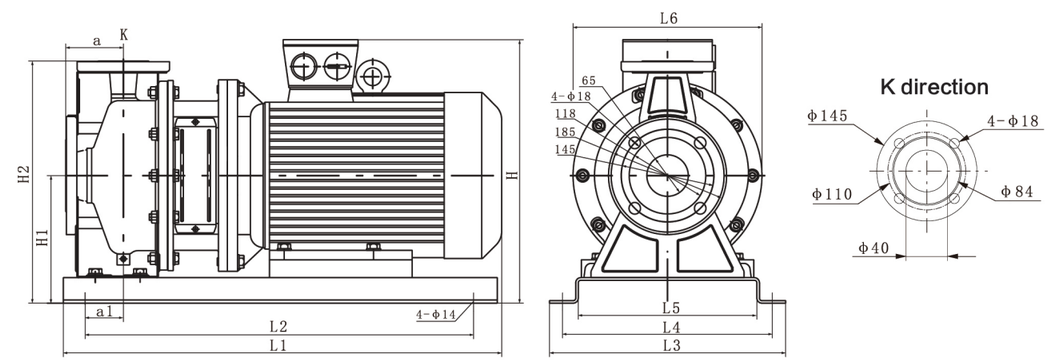

Dimensions and Weight

Pump model	Dimensions											Weight
	a	a1	H	H1	H2	L1	L2	L3	L4	L5	L6	(kg)
YS65-40-125/1.5	80	45	2307	152	294	502	430	280	240	192	210	33
YS65-40-125/2.2	80	45	307	152	294	502	430	280	240	192	210	35
YS65-40-125/3	80	45	322	152	294	532	460	300	260	212	250	47
YS65-40-160/4	80	45	345	152	294	557	480	330	290	242	250	52
YS65-40-200/5.5	100	50	413	200	380	680	580	370	330	280	300	78
YS65-40-200/7.5	100	50	413	200	380	680	580	370	330	280	300	82
YS65-40-200/11	100	50	456	200	380	790	690	420	380	330	350	161

Note: The dimensions of the single phase motor and explosion-proof motor are subject to change.

You can consult SHIMGE for more details.

YS65-50-*

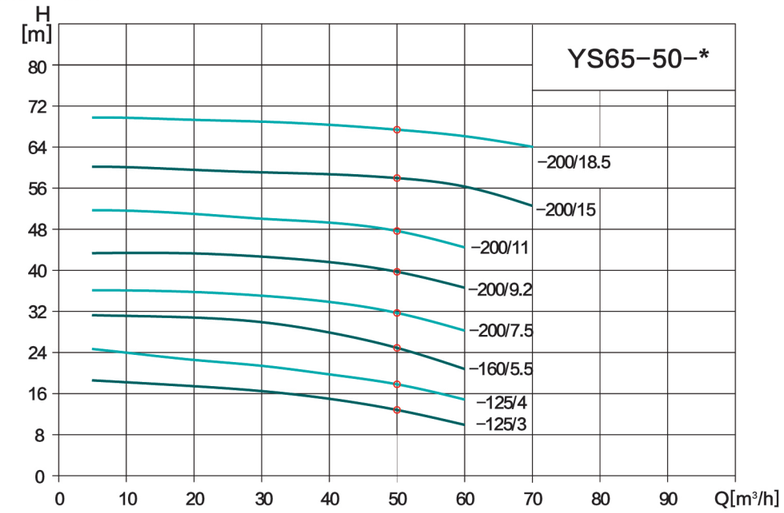

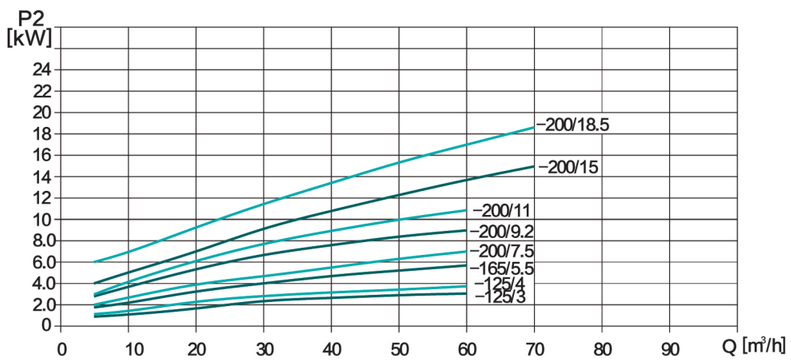

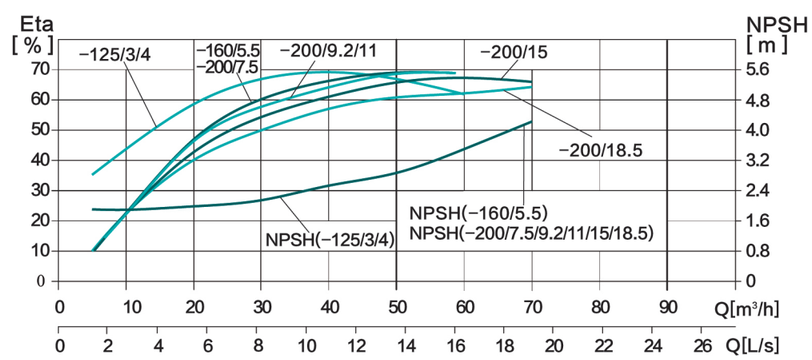

Performance Table

Pump model	Motor power(kW)	Q (m³/h)	5	10	20	30	40	50	60	70
YS65-50-125/3	3	H (m)	18	17.8	17.2	16.4	15.1	13	10	/
YS65-50-125/4	4		24.2	24.2	23.6	22.6	20.7	18	14.8	/
YS65-50-160/5.5	5.5		31.6	31.5	31	30	28	25	21.5	/
YS65-50-200/7.5	7.5		36.3	36.6	36.4	35.6	34.1	32	29.6	/
YS65-50-200/9.2	9.2		43.5	43.5	43.5	43	42	40	37.5	/
YS65-50-200/11	11		51.5	51.5	51	50	49.3	48	45.6	/
YS65-50-200/15	15		59.7	59.7	59.6	59.5	59	58	56.2	53
YS65-50-200/18.5	18.5		70.2	70.2	70.1	70	69.1	68	66.4	64

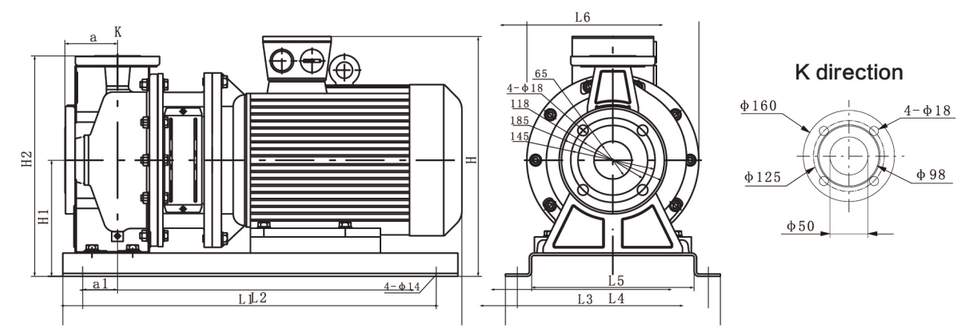

Dimensions and Weight

Pump model	Dimensions											Weight
	a	a1	H	H1	H2	L1	L2	L3	L4	L5	L6	(kg)
YS65-50-125/3	86	45	342	172	338	548	468	330	290	242	250	49
YS65-50-125/4	86	45	365	172	338	570	490	330	290	242	250	54
YS65-50-160/5.5	100	50	413	200	380	680	580	370	330	280	300	78
YS65-50-200/7.5	100	50	413	200	380	680	580	370	330	280	300	82
YS65-50-200/9.2	100	50	413	200	380	680	580	370	330	280	300	85
YS65-50-200/11	100	50	456	200	380	790	690	420	380	330	350	171
YS65-50-200/15	100	50	456	200	380	790	690	420	380	330	350	161
YS65-50-200/18.5	100	50	456	200	380	830	730	420	380	330	350	188

Note: The dimensions of the single phase motor and explosion-proof motor are subject to change.

You can consult SHIMGE for more details.

YS80-65-*

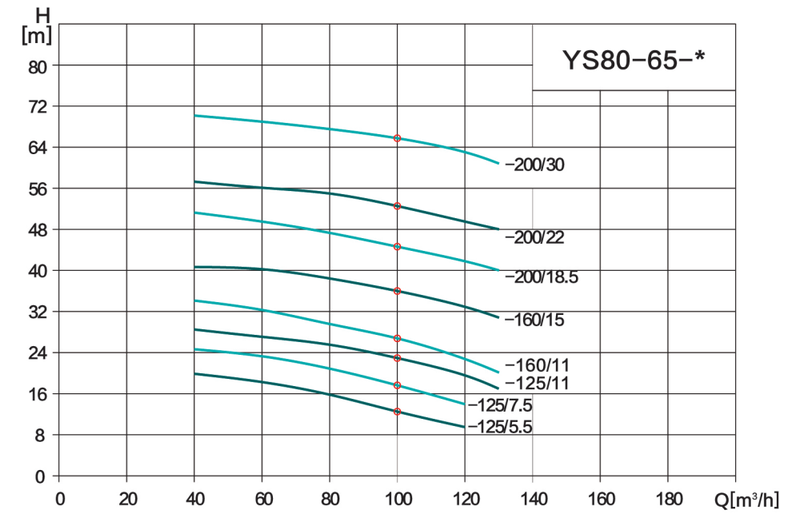

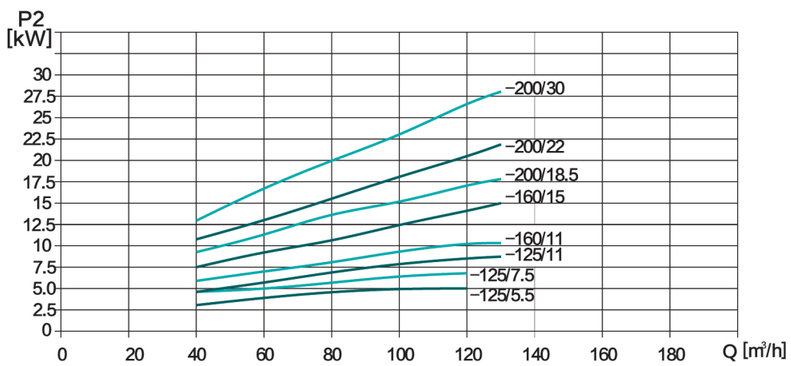

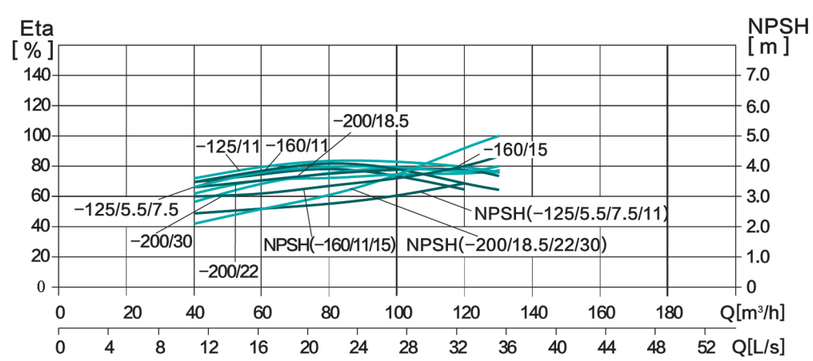

Performance Table

Pump model	Motor power(kW)	Q (m³/h)	40	50	60	70	80	90	100	110	120	130
YS80-65-125/5.5	5.5	H (m)	19.3	18.7	18	17	15.8	14.8	13	11.4	9.7	/
YS80-65-125/7.5	7.5		24.5	23.8	23.1	22.2	21	19.6	18	16.2	14.1	/
YS80-65-125/11	11		28.1	27.8	27.3	26.6	25.7	24.3	23	21.8	20.1	18.3
YS80-65-160/11	11		33.9	33	32.2	31.3	29.9	28.8	27	25.1	22.9	20.7
YS80-65-160/15	15		41.8	41.1	40.4	39.5	38.6	37.6	36	34.8	33	31
YS80-65-200/18.5	18.5		51	50.5	49.6	48.7	47.6	46.3	45	43.5	42.2	40.2
YS80-65-200/22	22		57.7	57.2	56.8	55.9	55.1	54	53	51.6	49.7	48.2
YS80-65-200/30	30		70.2	70.2	69.6	68.9	68.2	67.1	66	64.6	63.3	61.4

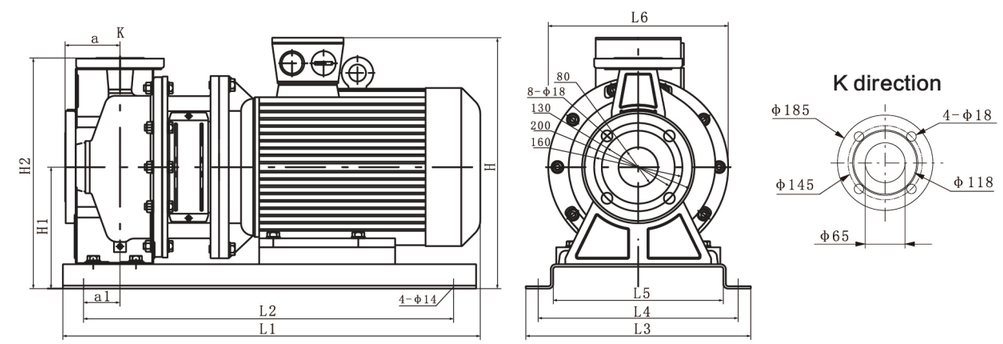

Dimensions and Weight

Pump model	Dimensions											Weight
	a	a1	H	H1	H2	L1	L2	L3	L4	L5	L6	(kg)
YS80-65-125/5.5	100	50	413	200	380	690	590	370	290	280	300	79
YS80-65-125/7.5	100	50	413	200	380	690	590	370	290	280	300	83
YS80-65-125/11	100	50	413	200	380	690	590	370	330	280	300	87
YS80-65-160/11	100	50	476	200	400	790	730	420	330	330	350	220
YS80-65-160/15	100	50	456	200	400	790	690	420	330	330	350	190
YS80-65-200/18.5	100	50	456	220	445	830	690	420	380	330	350	173
YS80-65-200/22	100	50	500	220	445	880	780	455	380	365	350	163
YS80-65-200/30	100	50	550	240	465	950	850	495	380	405	400	292

Note: The dimensions of the single phase motor and explosion-proof motor are subject to change.

You can consult SHIMGE for more details.

YS100-80-*

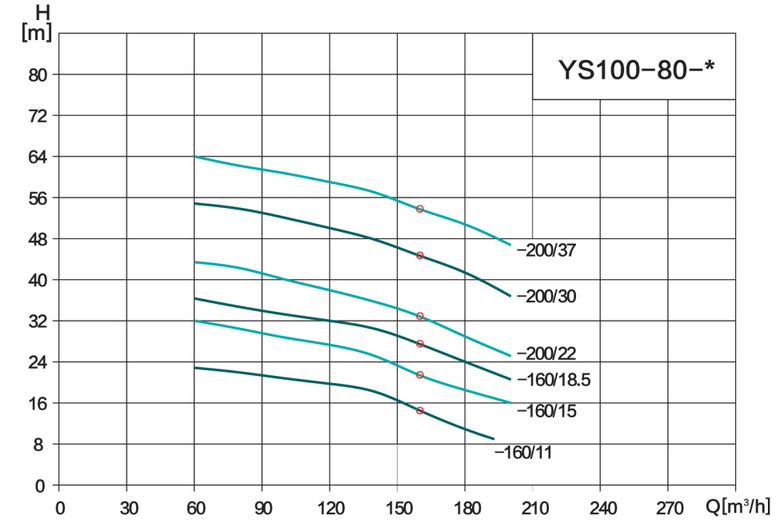

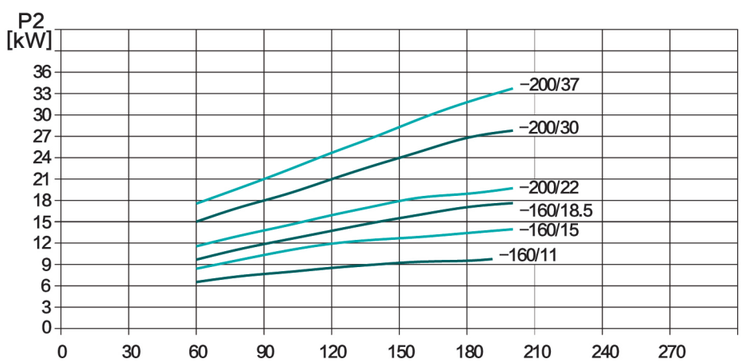

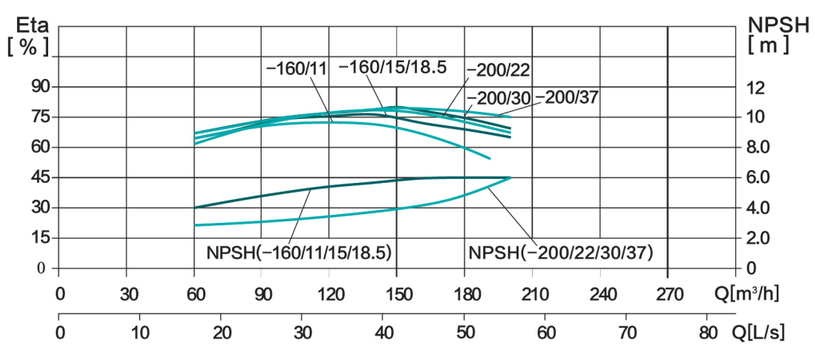

Performance Table

Pump model	Motor power(kW)	Q (m³/h)	60	80	100	120	140	160	180	192	200
YS100-80-160/11	11	H (m)	23.8	22.7	21.1	19.7	17.6	15	11.8	9.7	/
YS100-80-160/15	15		32.3	30.8	29.1	27.2	25.1	22	18.8	/	16.1
YS100-80-160/18.5	18.5		36.2	35.2	33.8	32.7	31	28	24.8	/	21.5
YS100-80-200/22	22		43.5	42	39.7	38.3	35.9	33	29	/	24.9
YS100-80-200/30	30		55.4	54.1	52.6	50.5	48.2	45	41.9	/	37.6
YS100-80-200/37	37		64.1	62.5	61	59	57.4	54	51.2	/	47.1

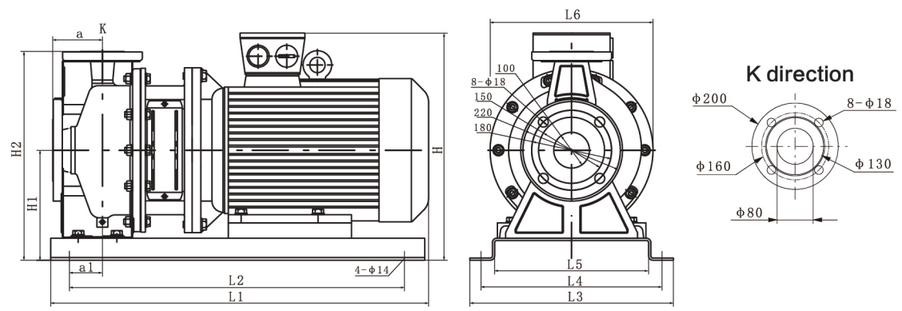

Dimensions and Weight

Pump model	Dimensions											Weight
	a	a1	H	H1	H2	L1	L2	L3	L4	L5	L6	(kg)
YS100-80-160/11	125	75	476	220	445	830	730	420	380	330	350	163
YS100-80-160/15	125	75	476	220	445	830	730	420	380	330	350	173
YS100-80-160/18.5	125	75	476	220	445	870	770	420	380	330	350	185
YS100-80-200/22	125	75	500	220	470	915	810	455	415	365	350	223
YS100-80-200/30	125	75	550	240	490	985	880	495	455	405	400	295
YS100-80-200/37	125	75	550	240	490	985	880	495	455	405	400	315

Note: The dimensions of the single phase motor and explosion-proof motor are subject to change.

You can consult SHIMGE for more details.